WARRANTY

_____ _____
production date *warranty card number*

Programmable controller / indicator . . . . . Case: . . . . . .

Output K1: ☐ EMR ☐ SSR ☐ MOS gate ☐ . . . . . .

☐ 0…20 mA ☐ 4…20 mA ☐ 0…10 V

Output K2: ☐ EMR ☐ SSR ☐ MOS gate ☐ . . . . . .

Power supply voltage: . . . . . Voltage U_p: V

Power supply for current transmitter: ☐ 10…30 VDC ☐ ..... VDC / max. 30 mA

Serial interface: ☐ RS485

Front protection: ☐ IP65 ☐ IP54 ☐ IP40

Factory calibration settings:

uREF		rAdd	
SPAn		A.0	
rCur		A.1	
rSch			

Serial No . . . . . Quality Control Passed: . . . . . .
(stamp)

Warranty: COMECO provides a 24-month warranty for this device.

. . . . . .
(date)

Retailer: . . . . . .

Buyer: . . . . . .

QD-8.2.4-WC

v2-13-12.16

COMECO CONTROL & MEASUREMENT

COMECO Inc., P.O.Box 378, Plovdiv 4000, BULGARIA, tel: +359 32 646523, 646524, fax: 634089
e-mail: info@comeco.org, WWW.COMECOGROUP.COM

SERIES PROGRAMMABLE CONTROLLERS AND INDICATORS

RT384, RT484, TC660

OPERATION MANUAL

The devices from the series RT384, RT484, and TC660 are multifunctional and low-cost programmable controllers or indicators with 1 or 2 displays and universal input, operating with the most common RTDs, thermocouples, and linear signals. The devices are equipped either with 2 relay outputs or with a control relay output plus an analog output (control or retransmission), which can control various actuators using varied control algorithms - from ON/OFF to PID with auto-tune. These series of devices can operate in Manual or Automatic mode, and the RS485 option enables networking. Available are 6 different casings according to DIN: 96x96, 96x48, 48x96, 72x72, 48x48, and 72x36 mm, and a casing for DIN-rail mounting.

Please read this Operation Manual before mounting and operating.

CONTENTS

CHAPTER	PAGE
TECHNICAL SPECIFICATIONS	3
MOUNTING	4
ELECTRO-MAGNETIC INTERFERENCE (EMI) ISSUES	4
WIRING	5
PARAMETER ADJUSTMENT	6
PARAMETER VALUE ADJUSTMENT	8
ERROR MESSAGES	8
PROGRAMMING LEVELS	9
OPERATING MODES	
Automatic mode	10
Manual mode	10
Auto-tune mode	11
Calibration mode	11
OUTPUT CONTROL	12
PARAMETER PROTECTION AGAINST UNAUTHORIZED ACCESS	14
COMMUNICATION PROTOCOL	14
WARRANTY	16

Table 10

Command	Condition	Response
'p.v'	normal operation	input signal value (as shown on the display)
	measured value outside physical range	(sat.lo) or (sat.hi), corresponding to a blinking ⌊ - - - ⌋ or ⌈ - - - ⌉ message on the display
	malfunction requiring service repair	(break), corresponding to a blinking - - - - message
unknown	-	(invalid command)
-	parity error in any byte	(parity error)

Writing in a device

If the frame consists of two words, it is recognized as a command for writing. With writing, transferred are the same two words that would have been received at the respective command for reading from the device.
If writing has been successful, the device responds with the respective command for reading.
If the writing has failed, the following responses are possible:

Table 10 (continued)

Response	Explanation
'invalid command. '	The device does not recognize the command.
'parity error. '	The device detects a parity error in a byte.
'not a number'	The parameter requires numerical value, and an attempt for writing other symbols has been made.
'point error. '	There has been an attempt to write a numerical value with decimal point position defining a resolution greater than the parameter's respective one.
'out of range. '	There has been an attempt to write a value outside the range (see Table 3).
'read only. '	The parameter is read-only (see Table 3).
'unit is busy. '	If the device is not at Basic level, writing is not allowed.
'not available. '	The output (K1 or K2) is not accessible under the selected control algorithm. (response '-----' during reading)
'automatic mode. '	In Automatic mode, values of K1 and K2 cannot be written.

Time delay

The device starts responding within 50 to 70 ms after the frame end, and transfers response bytes one by one.

- END -

PARAMETER PROTECTION AGAINST UNAUTHORIZED ACCESS

A special procedure protects this series of devices against unwanted access. This protection is programmable and covers all the levels. The **Level's Protection** parameter defines the parameters of which levels will be protected (see Table 3), and can also be protected. The **Display Refresh** parameter cannot be protected by any means. **Level's Protection** value may be changed ONLY after a previous exit from **Display Refresh** programming, and an immediate entrance into **Level's Protection** programming; besides, no other parameter should be changed and Configuration level should not be left.

COMMUNICATION PROTOCOL

Protocol architecture

ASCII protocol is used for communicating, and the information is exchanged in frames. Each frame consists of one, or two words separated by byte 32 (SPACE), and ends with bytes 13 (CR) and 10 (LF). The first word in the frame denotes a parameter SYMBOL as taken from Table 3, but spelled with ONLY small letters and points.
The following words ('commands') are used too:

- 'Ux', where 'x' is the device address (**Address** parameter from Table 3);
- 'K1' - for K1 output;
- 'K2' - for K2 output;
- 'p.v' - for measured input signal value.

Activating a device

For a device to be activated, it should receive a 'Ux' command, and respond to it with 'ok.'. The device remains active until it receives another 'Ux' command but with different line number, or a FA, L error.

Reading from a device

If the frame consists of only one word, it is recognized as a command for reading. The device responds to it by returning the same word and its value, according to Table 3, Table 9, and Table 10.
The device's responses to other commands are given in Table 9.

Table 9

	Algorithm	Command	Response
K1 - relay output K2 - relay output	onF.A onF.b	'k1' 'k2'	'on' or 'off'
	P, d.P	'k1'	[Control (PID) Output Value - a number with 0.1 resolution]
		'k2'	'-----' [N/A]
	P, d.S	'k1'	In Automatic mode: [Control (PID) Output Value - a number with 0.1 resolution] In Manual mode: '-----' [N/A]
		'k2'	'-----' [N/A]
	bot.A bot.b	'k1'	[Control (PID) Output Value - a number with 0.1 resolution]
		'k2'	'on' or 'off'
K1 - analog output K2 - relay output	onF.A onF.b	'k1'	'-----' [N/A]
		'k2'	'on' or 'off'
	P, d.A P, d.b	'k1'	[Control (PID) Output Value - a number with 0.1 resolution]
		'k2'	'on' or 'off'
	P, d.P	'k1'	'-----' [N/A]
		'k2'	[Control (PID) Output Value - a number with 0.1 resolution]
	bot.C	'k1' 'k2'	[Control (PID) Output Value - a number with 0.1 resolution]

TECHNICAL SPECIFICATIONS

Table 1

INPUT	universal, programmable, with 4(5) input terminals
- RTD Pt100 (1.385 or 1.391)	-100 °C...+600 °C
- RTD Cu100 (1.426 or 1.428)	-50 °C...+200 °C
Input line	3-wire, with automatic software compensation to 50 Ω
- T/C type "L-GOST" (NiCr-CuNi)	0 °C...+600 °C
- T/C type "J" (Fe-CuNi)	0 °C...+1000 °C
- T/C type "K" (NiCr-Ni)	0 °C...+1300 °C
- T/C type "S" (PtRh10-Pt)	0 °C...+1700 °C
- T/C type "R" (PtRh13-Pt)	0 °C...+1700 °C
- T/C type "B" (PtRh30-PtRh6)	+100 °C...+1800 °C
- T/C type "C" (W5Re-W26Re)	0 °C...+2300 °C
Cold-junction compensation	automatic software, -10 °C...+60 °C
DC current linear	0(4)...20 mA (programmable input-to-display correspondence)
DC voltage linear	0...50 mV (programmable input-to-display correspondence)
Decimal point position	programmable
Measurement calibration	programmable
OUTPUTS	2 relay or 1 relay plus 1 analog (specify when ordering)
Analog output:	0(4)...20 mA or 0...10 V (control or retransmission)
- maximum line load [Ω]	for case 'L': 50*(U_p-8); for the other cases: 50*(U_p-2); for voltage U_p - SEE 'WARRANTY'
Relay output:	**one of the following:**
- electromechanical relay (EMR)	5A/250VAC with NO/NC or NO contact
- SSR	1A/250VAC (0.2A/250VAC for 'L')
- MOS gate	0.1A/60VDC, optically isolated
- for external SSR	5...24 VDC, 30 mA, non-isolated form the device ground
Digital interface *(option)*	RS485: half-duplex, 4800 bps, parity check, 1 stop bit
CONTROL ALGORITHMS	ON/OFF, PID, alarms
Algorithm and parameter adjustment	from the keyboard or through the interface
Software input and output filtration	programmable
Access protection	programmable
CONTROLS	
PV display	4-digit, 7-segment bright red LED
SV display (only for RT484)	4-digit, 7-segment green LED
Display height (PV/SV)	20/14 mm ('B', TC660), 14/10 mm ('H', 'Q'), 10/10 mm ('V', 'S', 'R', 'L')
LED indicators	for signaling relay output activation
Keyboard	flexible foil-type keyboard with 3 membrane switch keys
METROLOGICAL SPECIFICATIONS	(all accuracy errors - in % from span)
Basic accuracy	less than ± 0.3% (0.5% for noble thermocouples)
Temperature drift	0,01%/°C
RTD line error	less than ± 0.001%/Ω @ Rlin. ≤ 50 Ω
Cold-junction error	less than ± 1°C at air temperature -10...+55 °C
Warm-up time	up to 15 min
POWER SUPPLY	
Supply voltage	SEE 'WARRANTY'
Consumption	less than 5 VA
CONSTRUCTION	
Dimensions	SEE 'MOUNTING'
Weight	for different models: from 150 to 400 g
Protection: terminals / sides	IP20 / IP40
Wiring	SEE 'WIRING'
Mounting	SEE 'MOUNTING'
Case material	plastic
OPERATING CONDITIONS	
Operating temperature / humidity	-10...55 °C / 0...85% RH
Storage temperature / humidity	-20...65 °C / 0...95% RH

MOUNTING

The devices from these series, except for case 'R', which is designed for DIN-rail mounting, are to be mounted on a panel with a maximum thickness of 5 mm. Place the device into a cutout and tight it into place using the enclosed mounting accessories. The cutout (Fig.1) and other construction dimensions of the different casings are given in Table 2. Fig.2 shows all different types of rear panels. Please note the terminals' location and numbering.

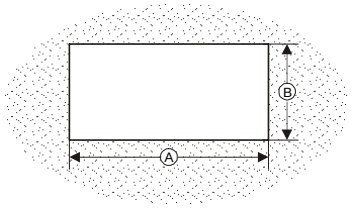

Fig. 1

Table 2

Casing	Front dimensions (width x height)	"A"	"B"	Mounting depth
B	96 x 96	90	90	98
H (TC660)	96 x 48	90	42	98
V	48 x 96	42	90	98
Q	72 x 72	67	67	66
S	48 x 48	45	45	100
L	72 x 36	71	29	55
R	45 x 78	-	-	124

1. All dimensions in the table are given in [mm].
2. The mounting depth includes the terminals' length.

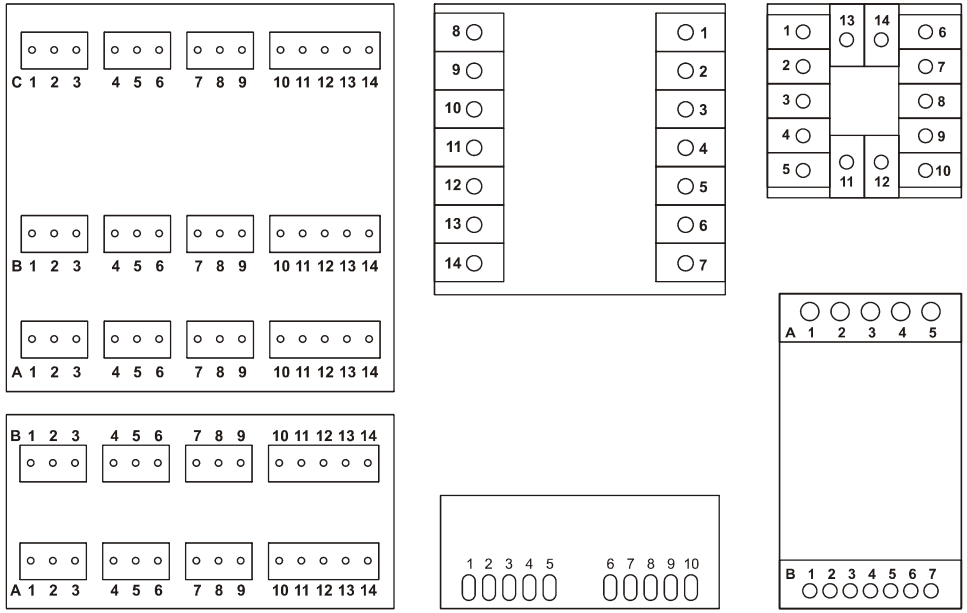

Fig. 2

ELECTRO-MAGNETIC INTERFERENCE (EMI) ISSUES

1. All signal wires must be shielded. They must not be packaged together with power cables.
2. Never lay the signal wires close to inductive or capacitive noise sources, such as relays, contactors, motors, etc.
3. All shields have to be grounded ONLY at one end, as closer as possible to the controller terminals.
4. Avoid sharing supply lines with powerful consumers, especially with inductive loads, switched on and off. To provide current supply for your device and at the same time stop unwelcome interference signals, use shielded 1:1 isolation transformer.
5. Short all switched (not only those switched by the controller) inductive consumers with special suppression networks: RC group and varistor - for AC loads, or diode - for DC loads.
6. If the controller operates in a very powerful EMI area, it has to be mounted inside a grounded metal shielding box.

ON/OFF control algorithm

When a control relay operates by ON/OFF algorithm, its static characteristic resembles the one shown on Fig.7.

Alarm

The static characteristic of a relative alarm relay is shown on Fig.8.

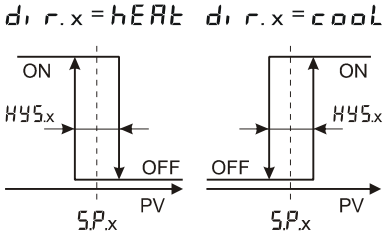

Fig. 7

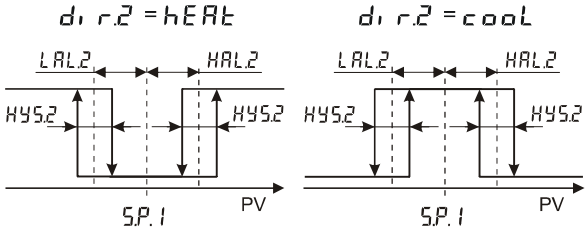

Fig. 8

PID control algorithm

The static characteristic of one or two outputs operating by PID algorithm, when **Direction** is set to 'heating', is shown on Fig.9. The drawings on Fig.10 and Fig.11 show the formula and the graphic curve of a control output, operating respectively by a pulse PID algorithm and by a step PID algorithm. The ANTI-WINDUP software system is an important feature of this series of devices.

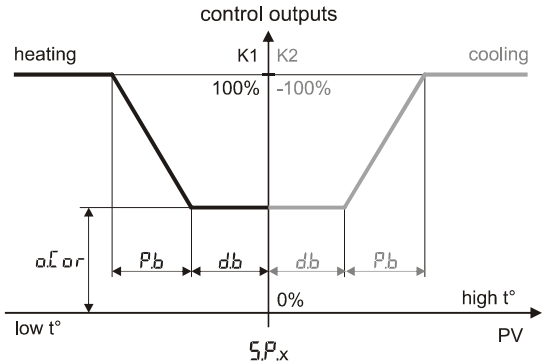

Fig. 9

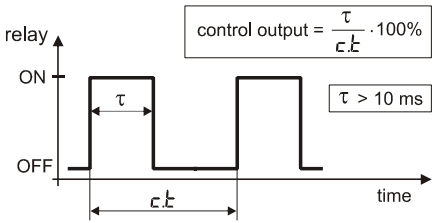

Fig. 10

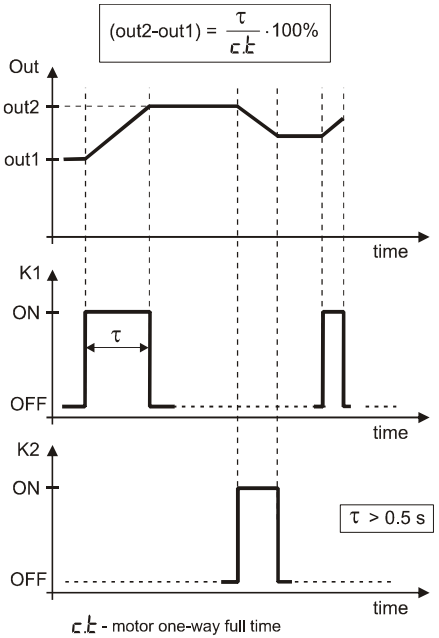

Fig. 11

Please note that **Direction** parameter can change the static characteristic of a control output as shown in Table 8.

Table 8

Direction 1(2)	Algorithm output	Calculated control ouput
cooL	-100…0%	100…0%
hEAt	0...100%	0...100%

Start the calibration sub-procedure by pressing key combination ◆ + ⌃ or ◆ + ⌄. A ?.?.?.?. message stays on the PV display throughout the calibration. Symbolic messages like L - - -, r - - -, or - - - - appear on the PV display if a measurement problem has occurred during the calibration. Some special messages on the PV display indicate the result of calibration sub-procedures. FAIL indicates an unsuccessful calibration. In case of a successful calibration, Stor appears for 0.5 s, followed by the symbol c. U. After a successful calibration procedure, the corresponding parameters (see Table 3) change their values according to Table 7. The calibration sub-procedures are independent, but in order to assure a complete and correct device calibration, follow the next sequence:

1. Calibrate the voltage measurement channel c. U
2. Calibrate the current measurement channel c. I
3. Calibrate the RTD measurement channel c. r1 and c. r2
4. Calibrate the 'cold junction' measurement channel c. t.c

Analog output calibration

Connect a proper mA- or volt-meter (depending on the output signal type) to the unit terminals prior to initiating the calibration.

Start the calibration procedure by pressing key combination ◆ + ⌃ or ◆ + ⌄. The PV display indicates the value of the parameter to be calibrated (A.0 or A. 1) within the 0...4079 range. The rightmost digit blinks, i.e is selected. Meanwhile, a corresponding current signal is setting up on the unit output terminals. The value of this current may vary from below lower range limit to over upper range limit. Observing the output signal value, adjust it as follows:

1. Select a digit (to be adjusted) with the ◆ key.
2. Using ⌃ and ⌄, adjust the displayed value with a step equal to the weight of the selected digit.
3. Continue adjusting till reaching the desired value of the output signal read by the meter.
4. Confirm the calibration by pressing ◆ + ⌃ or ◆ + ⌄.

Use the same procedure to adjust the second calibration point.

Exiting calibration mode

Exiting calibration mode is possible while the PV display indicates one of the calibration channel symbols from Table 7. Follow the procedure described in **'Configuration level'** and change the **Algorithm** parameter value from cLbr to another one. At Parametric level (CAL) all the calibration parameters are accessible and can be re-programmed.

Restoring factory calibration

Every unit is factory calibrated, and its calibration parameters have default values that lie within their ranges, as given in Table 3. The user who does not have the proper calibration equipment may recover factory settings in the following way:

1. Enter Configuration level and set **Algorithm** to cLbr.
2. Enter Parametric level and adjust the calibration parameters using the values recorded in **'Warranty'**.

IMPORTANT NOTE:

Check the calibration parameters in **'Warranty'** before operating.
In case of missing factory values, check them at Parametric level and fill the respective boxes in **'Warranty'**.

OUTPUT CONTROL

Control output operation

1. In Calibration mode, the relay control outputs are switched off, and the analog control output is at or below its lower range limit (during the calibration, the analog output accepts other values as described in **'Analog output calibration'**).
2. In Manual mode, the control outputs operate as shown in Table 6.
3. When a device switches between Manual and Automatic mode with PID algorithm, the Control (PID) Output Value remains unchanged. In this case, the device realizes a BUMPLESS switching.
4. In Automatic mode, the control outputs operate according to the control algorithm (Table 5). When a device switches between Automatic and Manual mode, the control outputs hold their state according to the control algorithm.
5. During Auto-tune mode, the PID control outputs operate as an ON/OFF controller/indicator with the selected set-point.
6. The control outputs deactivate when the value of any of the configuration parameters **Input Type**, **Point Position**, **Input Low**, **Input High**, **Low**, **High**, **Algorithm**, and **Cycle Time** is changed. The outputs remain inactive until Basic level is entered.
7. The control direction of each output is defined by the value of the respective **Direction** parameter. When two relay outputs are controlled by P, d.P or P, d.S algorithm though (see Table 5), **K2**'s direction is determined by **Direction1** value.

WIRING

Power supply wiring

The power supply wiring diagram for all case types is shown on Fig.3.

Notes:

1. See **'Warranty'** for power supply specifications.
2. Earthing is necessary ONLY if the power supply voltage is 90...250 V.

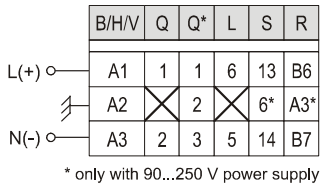

Fig. 3

Input signal wiring

The connection of different sensors to the universal input is shown on Fig.4.

Notes:

1. If the linear voltage input signal is greater than 50 mV DC, use an external resistance divider.
2. 3-wire voltage transmitters must be powered externally.
3. For case 'L', the internal supply voltage for 2-wire transmitter is lower than the DC power supply voltage with 2.5 V, and in case of AC power supply voltage, the schematic cannot be used. Use this schematic ONLY if the transmitter allows, or if such option has been previously requested.

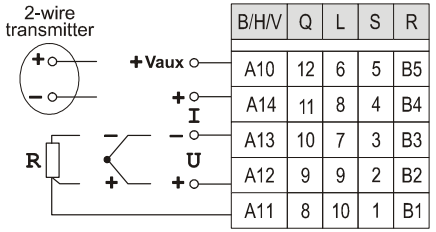

Fig. 4

Output wiring

The wiring of the relay outputs and the analog output for the different case types is shown respectively on Fig.5a and Fig.5b.

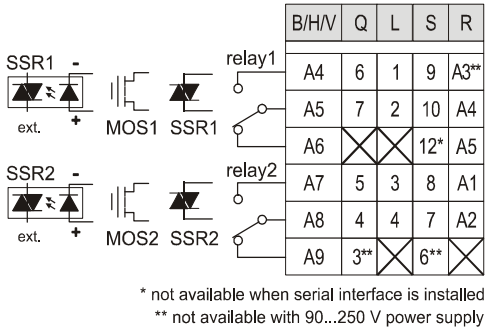

Fig. 5a

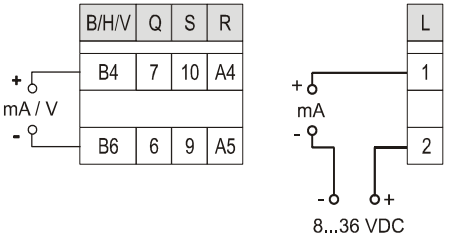

Fig. 5b

Notes:

1. For the load capabilities of the outputs, see **'Technical specifications'**.
2. The relay NO contacts are internally shorted by EMI suppression RC-group of 51 Ω and 15 nF.

RS485 serial interface wiring

The RS485 wiring diagram is shown on Fig.6.

Note: See **'Communication protocol'** for more detail information about the RS485 interface.

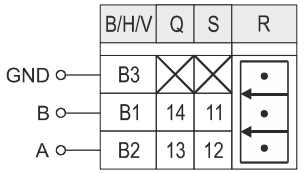

Fig. 6

PARAMETER ADJUSTMENT

A complete list of all the parameters is given in Table 3. The parameters are given in the order they appear on the display after the ⩒ key has been pressed, and their values in the order of appearance after the ⩔ key has been pressed.

Table 3

Parameter	Symbol	Description	Value	Dim.	Notes
Configuration Parameters (These parameters are part of Configuration level)					
Input Type *	inP	The type of the signal that can be connected to the device input	rPt.1	-	Pt 100 (1.385): -100...600 °C
			rPt.2	-	Pt 100 (1.391): -100...600 °C
			rCu.1	-	Cu 100 (1.426): -50...200 °C
			rCu.2	-	Cu 100 (1.428): -50...200 °C
			tc.J	-	T/C J: 0...1000 °C
			tc.K	-	T/C K: 0...1300 °C
			tc.L	-	T/C L: 0...600 °C
			tc.S	-	T/C S: 0...1700 °C
			tc.r	-	T/C R: 0...1700 °C
			tc.b	-	T/C B: 100...1800 °C
			tc.C	-	T/C C: 0...2300 °C
			i.020	-	0...20 mA
			i.420	-	4...20 mA
			u.050	-	0...50 mV
Point Position *	Pnt	The display decimal point position	x1; x0.1; x0.001	-	when indicating values with Input Signal Dimension (ISD)
Input Low *	i.Lo	Display low range, corresponding to the low signal range of a DC linear input	-1999 ... 9999	ISD	**ISD - Input Signal Dimension**
Input High *	i.Hi	Display high range, corresponding to the high signal range of a DC linear input	-1999 ... 9999	ISD	
Input Correction *	i.Cor	Specifies a constant to be added to the measured input value	-1999 ... 9999	ISD	
Analog Output Low	o.Lo	Specifies the input value corresponding to 0% analog output	-1999 ... 9999	ISD	only with retransmission analog output
Analog Output High	o.Hi	Specifies the input value corresponding to 100% analog output	-1999 ... 9999	ISD	only with retransmission analog output
Surge Filtration	SurG	Duration of the filtered surge	0 … 20	-	value '0' disables surge filtration
Filter Time	F.t	Input filter relative time constant	0 ... 1000	-	
Filter Band	F.b	Input filter activity zone	0 … **M** (1)	ISD	(a zone around the measured value)
Display Refresh	d.r	Display refresh time, when measured value or set-point value is indicated	0 ... 20	sec	
Low *	Lo	Lower limit of the operating range	-1999 ... 9999	ISD	
High *	Hi	Upper limit of the operating range	-1999 ... 9999	ISD	
Algorithm *	ALG	Defines the control algorithm, or, in case of 2 relay outputs, sets the measurement calibration mode	onF.A	-	K1 - ON/OFF; K2 - ON/OFF
			onF.b	-	K1 - ON/OFF; K2 - alarm
			Pi d.P	-	Pulse PID, -100…100% for both relays
			Pi d.S	-	Step PID, -100…100% for both relays (a special algorithm for motorized drives)
			bot.A	-	K1 - pulse PID, 0…100%; K2 - ON/OFF
			bot.b	-	K1 - pulse PID, 0…100%; K2 - alarm
			cLbr	-	Measurement Calibration mode
		Defines the control algorithm, or, in case of a relay and an analog output, sets the measurement calibration mode	onF.A	-	K1 - retransmission output; K2 - ON/OFF
			onF.b	-	K1 - retransmission output; K2 - alarm
			Pi d.A	-	K1 - PID with analog output 0...100%; K2 - ON/OFF
			Pi d.b	-	K1 - PID with analog output 0...100%; K2 - alarm
			Pi d.P	-	K1 - retransmission analog output; K2 - pulse PID 0...±100%
			bot.C	-	PID -100..0..100% with outputs: K1 - analog; K2 - relay pulse
			cLbr	-	Measurement Calibration mode

Table 6

	Algorithm	Action with ⩔	Action with ⩒
K1 - relay output K2 - relay output	onF.A	alternatively changes the state of relay **K1**	alternatively changes the state of relay **K2**
	onF.b		
	Pi d.P	press and hold to start the procedure of control output adjustment from -100.0 to 100.0 %	none
	Pi d.S	press/release to switch relay **K1** on/off	press/release to switch relay **K2** on/off
	bot.A	press and hold to start the procedure of control output adjustment from 0.0 to 100.0 %	alternatively changes the state of relay **K2**
	bot.b		
K1 - analog output K2 - relay output	onF.A	none	alternatively changes the state of relay **K2**
	onF.b		
	Pi d.A	press and hold to start the procedure of control output adjustment from 0.0 to 100.0 %	alternatively changes the state of relay **K2**
	Pi d.b	press/release to switch relay **K1** on/off	press/release to switch relay **K2** on/off
	Pi d.P	none	press and hold to start the procedure of control output adjustment from 0.0 to 100.0 %
	bot.C	press and hold to start the procedure of control output adjustment from -100.0 to 100.0 % or from 0.0 to 100.0 %	

Auto-tune mode

Entering this mode is possible when the **Tune** parameter is YES and the device is entering Automatic mode (from Manual mode or after power-on). The auto-tuning is impossible if the **Algorithm** parameter value is either onF.A, onF.b, or cLbr. During the Auto-tune mode, the device operates as an ON/OFF controller/indicator. After several oscillations of the control loop, it calculates all necessary parameters, and starts controlling, using preliminary selected PID algorithm and the so calculated parameters. The **Tune** parameter is automatically set to no. The auto-tuning stops and PID parameters resume their old values if no oscillates have been made for a certain period of time. During the auto-tuning process, the rightmost-digit point of the PV display blinks.

Calibration mode

To enter this mode, set the **Algorithm** parameter to cLbr. While the device is at Basic level, one of the following calibrating symbols appears on the PV display:

Table 7

Symbol	Calibration sub-procedure	Calibration value	Parameter
c. U	calibration of the voltage measurement channel	50 mV	SPAn
c. i	calibration of the current measurement channel	20 mA	rCur
c. r1	calibration of the RTD measurement channel; c. r2 appears only if c. r1 has been successfully calibrated	100 Ω (Pt100 DIN 0°C)	-
c. r2		313.59418 Ω (Pt100 DIN 600°C)	uREF and rSch
c. t.c	calibration of the 'cold junction' temperature channel ***This can be done only at a service laboratory.***		rAdd
c. A.0	calibration of the analog output signal at 0% calculated output		A.0
c. A.1	calibration of the analog output signal at 100% calculated output		A.1

Use ⩔ and ⩒ to select the calibration symbol to be displayed. The first five sub-procedures given in Table 7 refer to the **'Input calibration'**, and the last two ones refer to the **'Analog output calibration'**.

Input calibration

Prior to initiating input calibration, connect an external signal source to the device terminals, and adjust the calibration value according to Table 7.

OPERATING MODES

Automatic mode

Depending on the **Algorithm** parameter value, the device acts as outlined in Table 5.

Table 5

	Algorithm	Action of output K1	Action of relay output K2	Display reaction after ⌃ pressing	Display reaction after ⌄ pressing
K1 - relay output K2 - relay output	onF.A	ON/OFF control towards **Set Point 1**	ON/OFF control towards **Set Point 2**	**Set Point 1**	**Set Point 2**
	onF.b		relative alarm towards **Set Point 1**		none
	P, d.P	PID-pulse control towards **Set Point 1**		**Set Point 1**	Control (PID) Output
	P, d.S	PID-step control towards **Set Point 1**		**Set Point 1**	
	bot.A	PID-pulse control towards **Set Point 1**	ON/OFF control towards **Set Point 2**	**Set Point 1**	**Set Point 2**
	bot.b	PID-pulse control towards **Set Point 1**	relative alarm towards **Set Point 1**	**Set Point 1**	Control (PID) Output
K1 - analog output K2 - relay output	onF.A	analog retransmission output	ON/OFF control towards **Set Point 2**	none	**Set Point 2**
	onF.b		relative alarm towards **Set Point 1**	**Set Point 1**	none
	P, d.A	PID-analog control towards **Set Point 1**	ON/OFF control towards **Set Point 2**	**Set Point 1**	**Set Point 2**
	P, d.b		relative alarm towards **Set Point 1**	**Set Point 1**	Control (PID) Output
	P, d.P	analog retransmission output	PID-pulse control towards **Set Point 2**	Control (PID) Output	**Set Point 2**
	bot.C	PID-analog control towards **Set Point 1**	PID-pulse control towards **Set Point 1**	**Set Point 1**	Control (PID) Output

Automatic mode for devices with one (PV) display (RT384 and TC660)

In Automatic mode, such devices normally display the measured value (PV). Press and hold ⌃ or ⌄ to read (depending on the **Algorithm**, according to Table 5) S.P. 1, S.P.2, or out for a moment, followed by the value of **Set Point 1**, **Set Point 2**, or Control (PID) Output. The display becomes dark for 0.5 s after key release, and then indicates the PV again.

To adjust the value of the displayed parameter (if it is not prohibited by **Level's Protection** parameter), press ◆ while holding ⌃ or ⌄. After adjustment, the device displays the PV again.

Automatic mode for devices with two (PV and SV) displays (RT484)

In Automatic mode, such devices normally display the measured value (PV) and the set point value (SV). Press and hold ⌃ or ⌄ to read (depending on the **Algorithm**, according to Table 5) S.P. 1, S.P.2, or out on the PV display, and the value of **Set Point 1**, **Set Point 2**, or Control (PID) Output on the SV display.

To adjust the value of the displayed parameter (if it is not prohibited by **Level's Protection** parameter), press ◆ while holding ⌃ or ⌄. After adjustment, the device displays the PV again.

In some cases (see Table 5), depending on the device variant and the control algorithm, the **Set Point 2** also has to be adjusted. After adjustment, the PV display will show the measured value again, and the SV display will show the newly adjusted value.

Display refreshment

The display reading is being refreshed in accordance with the **Display Refresh** parameter value:

1. If **Display Refresh** value is '0', the unit always displays the *actual* parameter value without any refreshment limits;
2. Otherwise, the unit will refresh its displays not more often than the time period, specified by the **Display Refresh**.

Manual mode

While a device is in Manual mode:

1. The PV display indicates the measured value,
2. The SV display, if there is such, indicates - - - - ,
3. The rightmost-digit point of the PV display lights constantly.

Depending on the **Algorithm** parameter, the device functions as described in Table 6.

Table 3 (continued)

Parameter	Symbol	Description	Value	Dim.	Notes
Automatic *	Auto	Specifies device control mode if **Algorithm** is a control algorithm	YES	-	Automatic mode
			no	-	Manual mode
Cycle Time *	ct	Period duration of the pulse output (in case of Pulse PID algorithm); Full time of the motor one-way stroke (in case of Step PID algorithm)	1 ... 524	sec	
Address *	Addr	Device address during communication	1 ... 99	-	
Level's Protection	LP	Specifies the parameter protection against unauthorized access	nonE	-	no protected parameters (full access)
			conF	-	Only configuration parameters are protected (2).
			PAr	-	The parameters from both Configuration and Parametric levels are protected (2).
			ALL	-	All parameters are protected (2).
Parameters of the control algorithm (These parameters are part of Parametric level) (Only the parameters concerning the selected control algorithm can be displayed)					
Direction 1	dir.1	Direction of the control action of **K1** output	cool, hEAt	-	('cooling', 'heating')
Hysteresis 1	HYS.1	Hysteresis of relay **K1**	0 … **M** (1)	ISD	when ON/OFF algorithm is selected
Dead Band	db	Dead band of the PID algorithm	0 … **M** (1)	ISD	
Proportional Band	P.b	Proportional band of the PID algorithm	0 … 9999	ISD	
Integral Time	t,	Integral time of the PID algorithm	0 … 9999	sec	
Derivative Time	t.d	Derivative time of the PID algorithm	0 ... 1000	sec	
Filter Time	t.F	Filter time of the PID output software filter	0 ... 1000	sec	The filter function is 1/(Ts+1).
Output Correction	o.Cor	A constant that can be added to the calculated output of the PID algorithm (output shift)	-100.0 … 100.0	%	with two-relay pulse PID algorithms
			0.0 ... 100.0	%	with one-relay pulse PID
Tune *	tunE	PID algorithm Auto-tune mode	no, YES	-	
Direction 2	dir.2	Direction of the control action of output **K2**	cool, hEAt	-	('cooling', 'heating')
Hysteresis 2	HYS.2	Hysteresis of relay **K2**	0 … **M** (1)	ISD	when ON/OFF or Relative alarm algorithm is selected
Low Alarm 2	LAL.2	Relative alarm low limit of relay **K2**	0 … **M** (1)	ISD	under **Set Point 1**
High Alarm 2	HAL.2	Relative alarm high limit of relay **K2**	0 … **M** (1)	ISD	over **Set Point 1**
Parameters of measurement calibration (These parameters are part of Parametric level)					
*	urEF		250.0 ... 550.0	-	
*	SPAn		58.00 ... 63.00	-	
*	r.Cur		350.0 ... 450.0	-	
*	r.Sch		3.500 ... 5.500	-	
*	r.Add		5.000 ... 6.000	-	
*	A.0	A number corresponding to 0% calculated output	0 ... 4079	-	The result of the calibration is a physical output signal from near the lower range limit to over the higher range limit.
*	A.1	A number corresponding to 100% calculated output	0 ... 4079	-	
Parameters of Basic (operating) level					
Set Point 1	S.P.1	Set-point value of output **K1** in Automatic mode	within the operating range	ISD	from **Low** to **High**
Set Point 2	S.P.2	Set-point value of output **K2** in Automatic mode			

* - When the device is communicating, the values of these parameters are read-only.

💣 - Changing the value of this parameter reflects the real value of all parameters with ISD dimension. For example, changing **Point Position** from (x1) to (x0.1) causes a parameter (for example **Set Point 1**) value of 100 to change to 10.0.

(1) In case of temperature input, the integer part of **M** must not be greater than 100; otherwise, **M** = 25% of signal range

(2) Except **Display Refresh** and **Level's Protection**

PARAMETER VALUE ADJUSTMENT

Numerical value adjustment

After entering Numerical parameter adjustment mode, read the value together with the left zeroes on the PV display. If operating with a RT484 unit, read the parameter symbol (name) on the PV display and the parameter value on the SV display.
The rightmost digit blinks, i.e is selected. Increase or decrease the blinking digit value with ⌃ or ⌄ key. The 3 rightmost digits can accept values from 0 to 9, and the leftmost digit can also accept the values - and 1. To select another digit, use ◆.
Confirm the adjusted parameter value by pressing the key combination ◆ + ⌃ or ◆ + ⌄. If the parameter value is within its range, the adjustment completes, and the PV display indicates the symbol of the adjusted parameter, or, in case of a RT484 unit, the PV and SV displays indicate again respectively the symbol and the value of the adjusted parameter. If the parameter value is outside its range, the PV display (or, in case of RT484, the SV display) indicates the lowest or the highest possible parameter value, depending on over-ranged or under-ranged value adjusting attempt. If the new value has not been confirmed and no key has been pressed for a certain period of time, value adjustment automatically ceases, and the parameter retains its initial value.

Symbolic value adjustment

After entering Symbolic parameter adjustment mode, read the blinking parameter value on the PV display, or on the SV display if the device is a RT484. Change it using ⌃ and ⌄. Confirm by pressing the key combination ◆ + ⌃ or ◆ + ⌄.
If the new value has not been confirmed and no key has been pressed for a certain period of time, value adjustment automatically ceases, and the parameter retains its initial value.

ERROR MESSAGES

1. If a message of the i.cxx type is displayed permanently, and still exists after power off/on, the device has to be repaired by an authorized service.
2. A blinking message FAIL means that parameter values stored in the non-volatile memory are not correct. If the problem cannot be solved after power reset, press and hold ◆. All parameters, including calibration parameters, accept their default (factory) settings.
3. Sometimes, at entering Basic level, the device can find non-conformities in parameter values that must be corrected before operating at Basic level. The device indicates such kind of problems by displaying blinking messages as given in Table 4.

Table 4

Message	Possible problem	Pressing ◆ leads to:
Err.1	incorrectly adjusted operating range limits: **Low** > **High** (Table 3)	Configuration level
Err.2	wrong correspondence of the lower limits of: 1. operating range and display range of linear input 2. operating range and signal range of temperature input (Table 3)	Configuration level
Err.3	the same as above, but for the upper limits (Table 3)	Configuration level
Er.Fb	the value of **Filter Band**, **Dead Band**, **Hysteresis 1**, **Hysteresis 2**, **Low Alarm Limit 2**, or **High Alarm Limit 2** is not correct (Table 3)	Configuration level
Er.db		Parametric level
Er.H1		Parametric level
Er.H2		Parametric level
Er.LL		Parametric level
Er.HL		Parametric level
Er.AL	broken restriction: (**Low Alarm Limit 2**) + (**High Alarm Limit 2**) > **Hysteresis 2** (see **'Outputs'** / **'Alarms'**)	Parametric level
E.out	output shift does not match the control algorithm (Table 3)	Parametric level
E.SP.1	set-point value is out of operating range (Table 3)	programming of **Set Point 1**
E.SP.2		programming of **Set Point 2**

PROGRAMMING LEVELS

Basic level

The device behavior at Basic Level depends on **Point Position**, **Display Refresh**, **Low**, **High**, **Algorithm**, **Automatic**, and **Tune** configuration parameters.
If **Algorithm** value is clbr, the unit is in Calibration mode.
If **Automatic** parameter is either YES or no, the unit operates in either Automatic or Manual mode. In case of Automatic mode and PID algorithm, the **Tune** parameter defines the Auto-tune mode.

Displaying the PV and SV values
The devices from the series indicate the measured input value (PV) with a resolution, according to the **Point Position** parameter.
The two-display controllers indicate the set point value (SV) with the same resolution on the SV display. If the integer part of the PV cannot be entirely displayed, the device generates blinking 'overflow' messages on the PV display (oL or -oL, depending on the PV sign). PV display reading blinks if the measured value is out of its operating range (see Table 3).
When the measured value is out of physical range, the PV display indicates blinking symbolic messages: ⌊ - - - ⌋ (under-range) or ⌈ - - - ⌉ (over-range). The symbolic message - - - - on the PV display means a measurement problem requiring service repair.

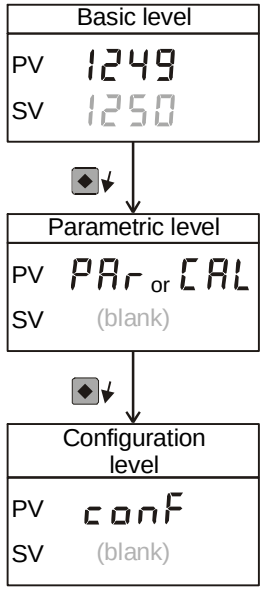

Parametric level

This level contains the parameters of the programmed control algorithm or those of the measurement calibration.
Enter this level by pressing and holding the ◆ key until message PAr or CAL appears on the PV display. Release the key. Unless the key is not released on time, the unit enters Configuration level. At Parametric level and in calibration mode, all the calibration parameters are accessible. In the rest of the modes, the control algorithm parameters are accessible.
Choose a parameter using the ⌃ or ⌄ key. While holding the ◆ key, read the parameter value. Before releasing the ◆ key, press ⌃ or ⌄ to adjust the parameter value, if this has not been prohibited by the **Level's Protection** parameter. If no key has been pressed for a while, the device automatically returns to Basic level, storing all the changes made.
Use the key combination ⌃ + ⌄ to return to Basic level and save the changes.

Configuration level

This level contains all device configuration parameters. Enter by pressing and holding the ◆ key until message conF appears on the PV display.
To access and adjust the configuration parameters, follow the method described in **'Parametric level'**.